\# Part# 30WPOG

DESC: 128 OZ. PREMIER

THE CARY COMPANY
PRODUCTS DISTRIBUTORS
PH 630-629-6600
FX 630-629-3690

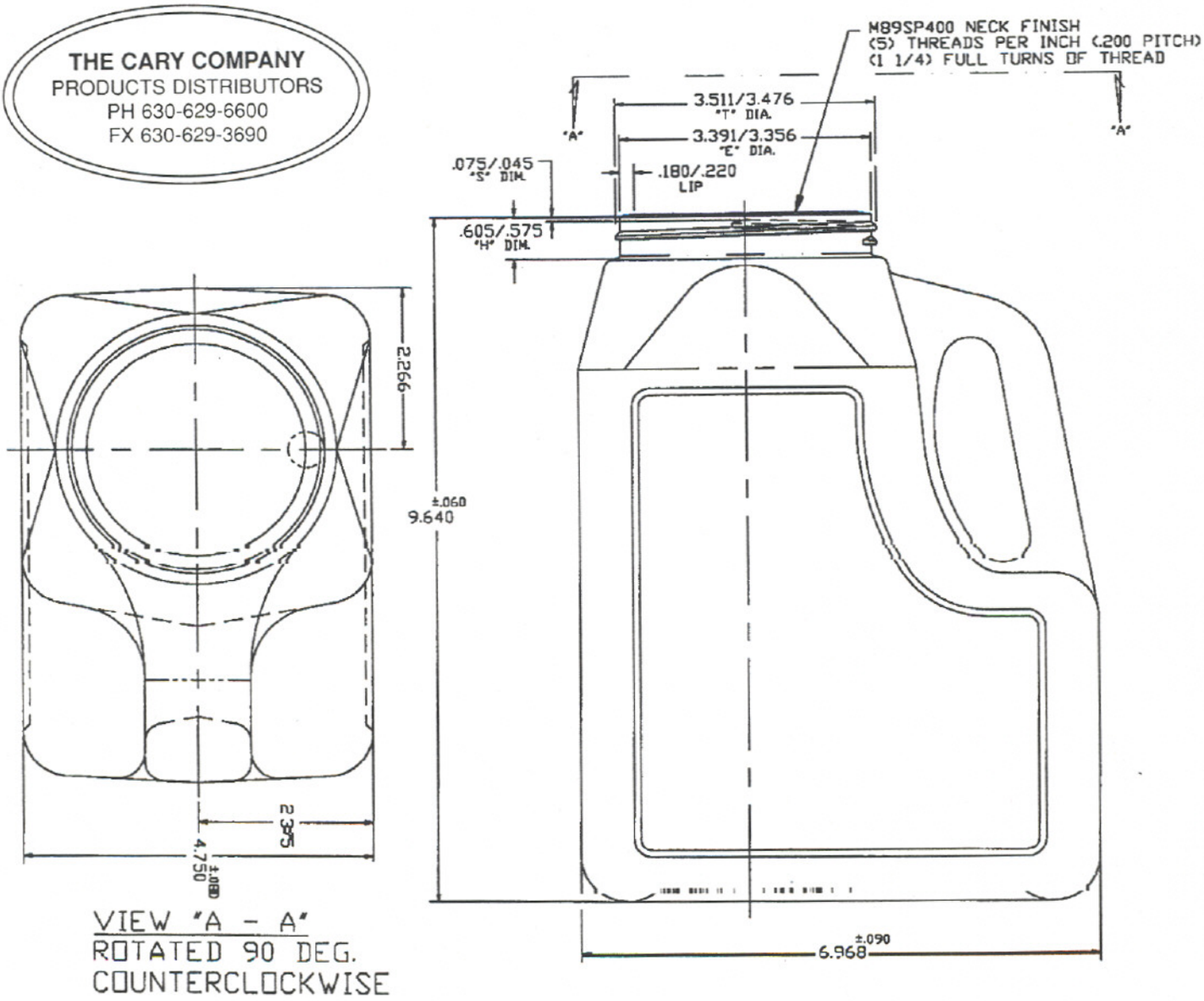

MATERIAL TYPE	GRAM WEIGHT	NECK FINISH	OVER FLOW	CASE	PACK	48' T/L QUANTITY	53' T/L QUANTITY	PRODUCTION PLANT
PETG	130	89SP400	138.65 OZ	BULK	60	12960	14400	