Part#: 26WGV1

Part# 26WGV1 - 2" Visegrip II®Capseal Crimping Tool
For use with 2" VISEGRIP II ® metal cap seals
Usage Note: The GV-10 can only be used on containers using VISEGRIP II ® drum closures.

RIEKE® manual crimping tools for use on both metal and plastic seals, are specially designed to crimp cap seals in one easy motion. They have a built-in, automatic compensator which enables use of these tools with drum stock ranging from 24 to 16 gauge. This important feature ensures a perfect seal every time, and is especially valuable because drum stocks within the same nominal gauge size often vary in thickness.

Supplied By: **The Cary Company**
Ph: 630-629-6600
www.thecarycompany.com

~ PARTS LIST ~

No.	DESCRIPTION	QTY.	DETAIL No.	COMPUTER No.
1	**HOUSING**	**1**	**AV0517-A**	
2	**CLOSING COLLETS (SET OF 12)**	**1**	**AV0075**	
3	**DRAW PIN**	**1**	**AV0502**	
4	ACTUATING WASHER	1	A0602	
5	RETURN SPRING	1	A0666	
6	**STOP COLLAR**	**1**	**AV0549**	
7	YOKE	REF.	A0499-02	
8	CUSHIN WASHER	1	A0569-01	
9	RUBBER CUSHIN	1	A0523	
10	RUBBER CUSHIN RETAINER	1	A0570	
11	HANDLE ASSEMBLY	2	AS498 (A1)	
12	5/8-18 NF NUT	1		09-04-050
13	LINK FASTENER	REF.	A0501	
14	RETAINER RINGS	REF.	A0521	
15	ACH60 LINK KIT ASSY	2		36-99-030
16	ACH60 SIDE PLATE	4		36-99-032
17	SPACER (2)	REF.	A1805	
18	1/8" x 1" RIVET	1		11-50-026
19	SPACER SPRING	12	A0092	
20	FINGER TENSION WIRE	1	A0396	
21	TENSION COIL SPRING (CUT TO 9.75 LG.)	1	A0080	
22	**X-6 SNAP RING**	**1**	**AV0010**	

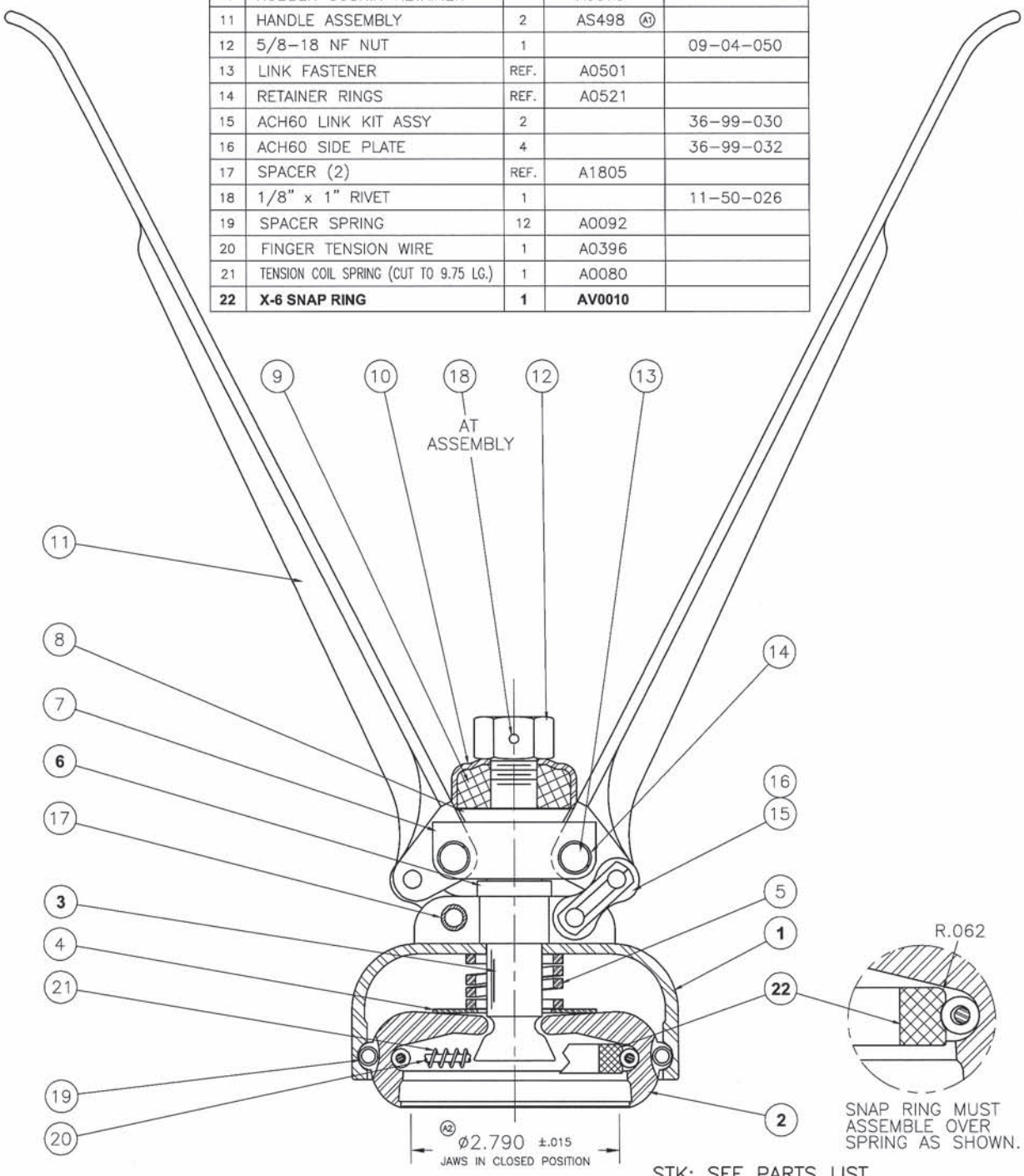

STK: SEE PARTS LIST

BREAK ALL SHARP EDGES WITH 1/64" RADIUS, UNLESS OTHERWISE SPECIFIED	DATE 10/13/05	DRAWN BY BNY	Supplied By: **The Cary Company** Ph: 630-629-6600 www.thecarycompany.com			DETAIL NAME: ASSEMBLY
THE FOLLOWING TOLERANCES APPLY UNLESS OTHERWISE SPECIFIED:		CHECKED GMB				TOOL ASSY. NAME: R6 VGII CRIMPING TOOL
ANGLES ±1/4°	SCALE NTS					PRODUCT: 2" CAPSEAL — TOOL ASS'Y NUMBER
HUNDRETH ±.015						DRAWING NUMBER: 40000004
THOUSANDTH ±.002		APPROVED	A — 1)WAS A0498 2)WAS 2.780	2/21/06	BNY	FOR: AUBURN — DETAIL NUMBER
			CHANGE NUMBER — CHANGE	DATE	BY	MATERIAL — TEMPER — GV-10