IF YOU... MIX IT. FILL IT. PACK IT. SHIP IT.

WE HAVE A PRODUCT FOR YOU

24mm 24-400 White Industry Standard Plastic Cap with F217 Liner

Product Category: Continuous Thread Caps

Part #	30W24L
Neck Width	24mm
Neck Finish	24-400
Color	White
Material	PP

The CARY COMPANY Est. 1895

1195 W. Fullerton Ave. | Addison, IL 60101 | T: 630.629.6600 | F:630.629.3690 | TheCaryCompany.com

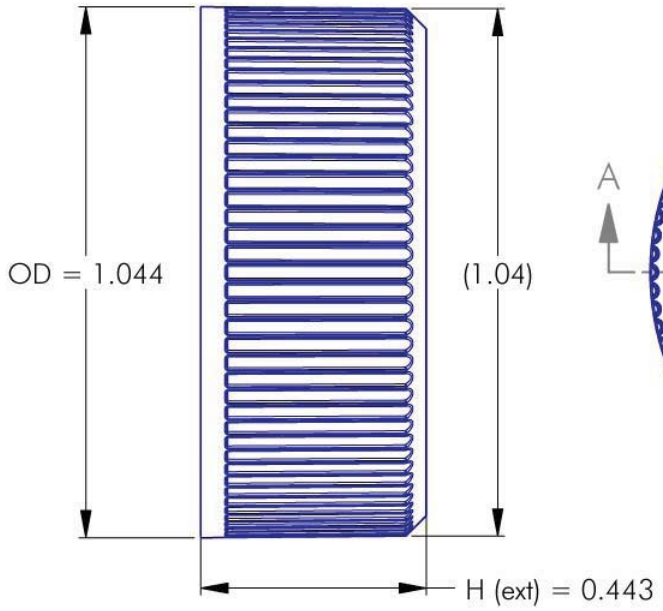

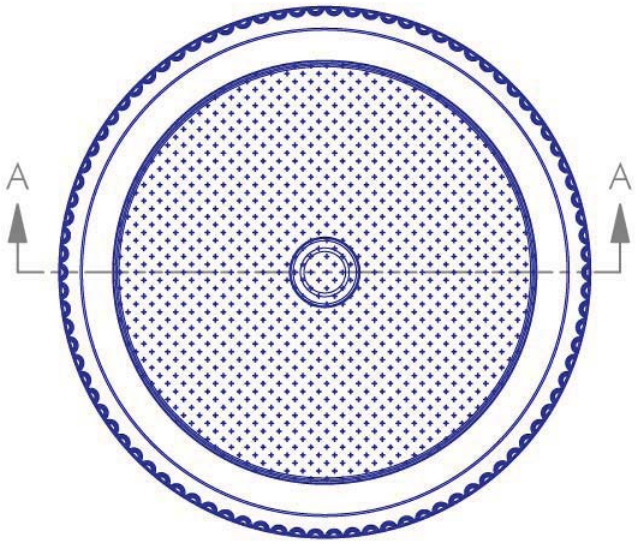

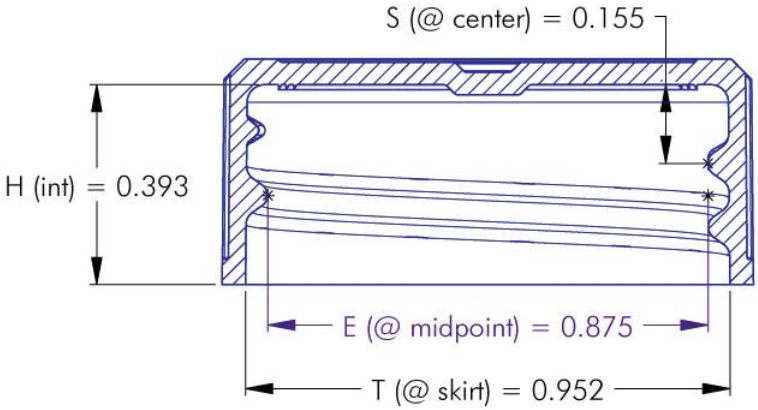

NOTES: (UNLESS OTHERWISE SPECIFIED)
1. ALL DIMENSIONS ARE IN INCHES.
2. TOLERANCE ON ALL DIMENSIONS IS ±0.010".

#	00.00.00	-	--
REV	DATE	DESCRIPTION	BY

Supplied By: **The Cary Company**
Ph: 630-629-6600
www.thecarycompany.com

PITCH (TPI): 8	# OF TURNS: 1-1/8	MATERIAL: POLYPROPYLENE	
DRAWING #: 24 - 400 - 62S			SCALE: 3 : 1
DESCRIPTION: FINE RIB / MATTE FINISH TOP			
DRAWN BY: BEZ	DATE: 12.02.05	APPROVED BY: LRE	REV: 0

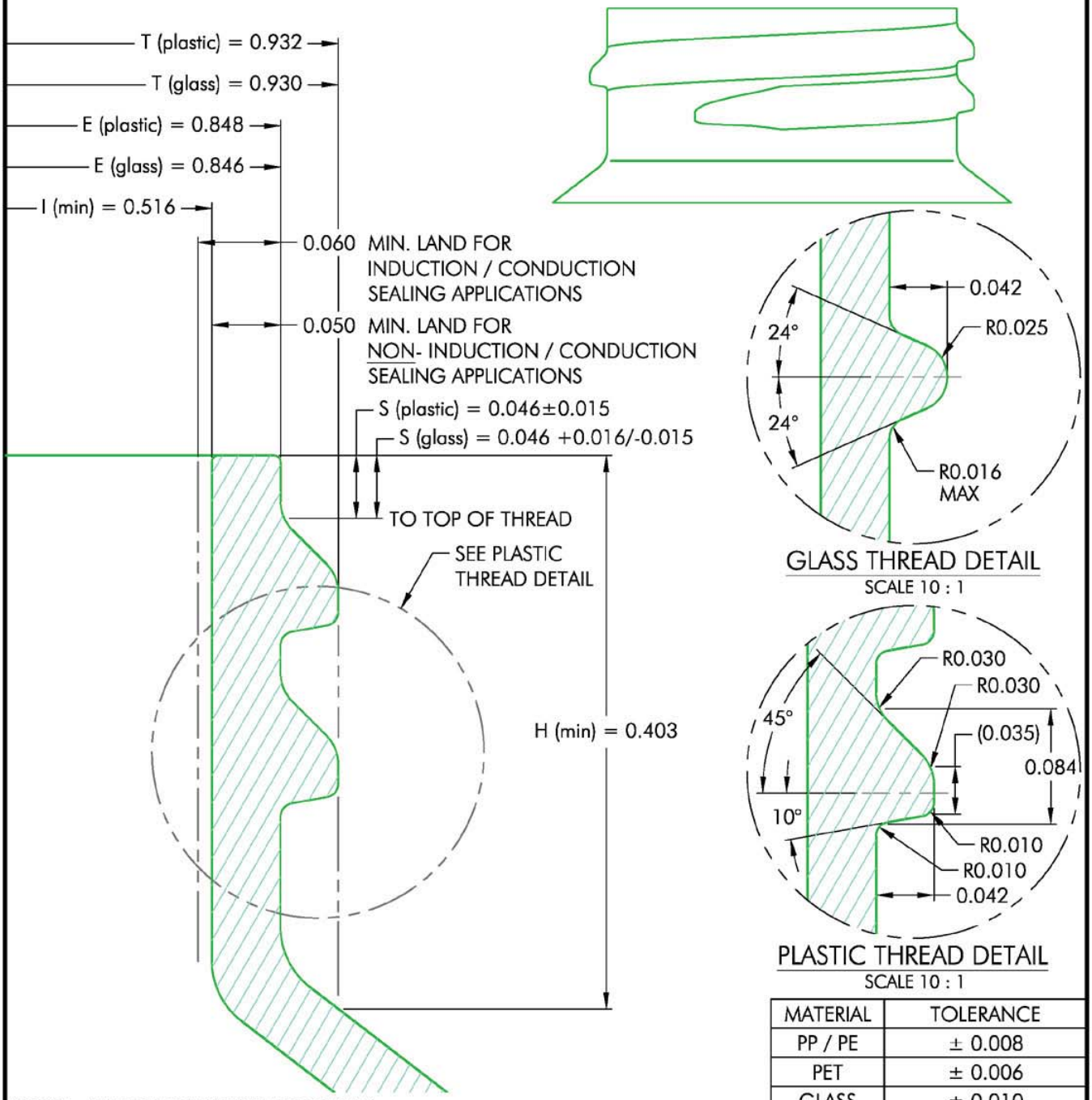

MATERIAL	TOLERANCE
PP / PE	± 0.008
PET	± 0.006
GLASS	± 0.010

NOTES: (UNLESS OTHERWISE SPECIFIED)
1. ALL DIMENSIONS ARE IN INCHES.
2. TOLERANCE ON ALL DIMENSIONS GIVEN BY CHART.

#	00.00.00	-	--
REV	DATE	DESCRIPTION	BY

Supplied By: **The Cary Company**
Ph: 630-629-6600
www.thecarycompany.com

PITCH (TPI): 8	# OF TURNS: 1-1/4	MATERIAL: PER CHART	
DRAWING #: 24-400-FINISH			
DESCRIPTION: FINISH FOR USE WITH PCI 24-400 CLOSURES			
FILE: 24-400-FINISH.dwg		SCALE: 10 : 1	
DRAWN BY: BEZ	DATE: 09.23.96	APPRVD BY: LRE	REV: 0 BF

Supplied By: **The Cary Company**
Ph: 630-629-6600
www.thecarycompany.com

Product Name:	**SureSeal®**
Product Type:	One piece, three-ply coextruded liner.
Material:	Low density polyethylene skin top and bottom with foamed polyolefin core.
Composition:	Core and outer skin fusion. Closed cell foam core of LDPE is sandwiched within LDPE. This results in a chemically fused, single polymeric product.
Composition Benefits:	Symmetrical construction - either side serves as the liner face. Single polymeric product - no ply-separation.
Application:	Applications have provided positive sealing for foods, beverages, pharmaceuticals, cosmetics, industrial and household chemicals.
Compatibility:	SureSeal® is chemically inert, odorless, tasteless and dust-free. Good resistance to acids, alkalies, slow solvents, alcohols, oils and aqueous products. Poor resistance to active hydrocarbon solvents.
Performance Values:	Excellent sealability, resiliency and compression recovery. Excellent torque retention.
Thickness/Width:	Available in thickness of .030” (+/- .005“) Widths from 1” to 36” (+/- .031”)
Density:	24 < 28 lbs/ft³
Color:	FDA approved white. Custom colors available upon request.
FDA Status:	Drug Master File #12831. This material complies with FDA regulation 177.1520(c)3.1 for food contact application.

The information and statements concerning the products as stated in this bulletin are not to be construed as a warranty or representation for which we assume legal responsibility. Empirical testing should be undertaken to determine the suitability for a particular purpose. No warranty of fitness for a particular purpose is made. SureSeal® is a Registered Trademark of J. S. Plastics, Inc.