# IF YOU... MIX IT. FILL IT. PACK IT. SHIP IT.

# WE HAVE A PRODUCT FOR YOU

Part # 30WSSG

## 1 Gallon (128 oz.) Natural HDPE Plastic Space Saver Dairy Milk Jug, 38mm 38-400

The CARY COMPANY Est. 1895

1195 W. Fullerton Ave. | Addison, IL 60101 | T: 630.629.6600 | F:630.629.3690 | TheCaryCompany.com

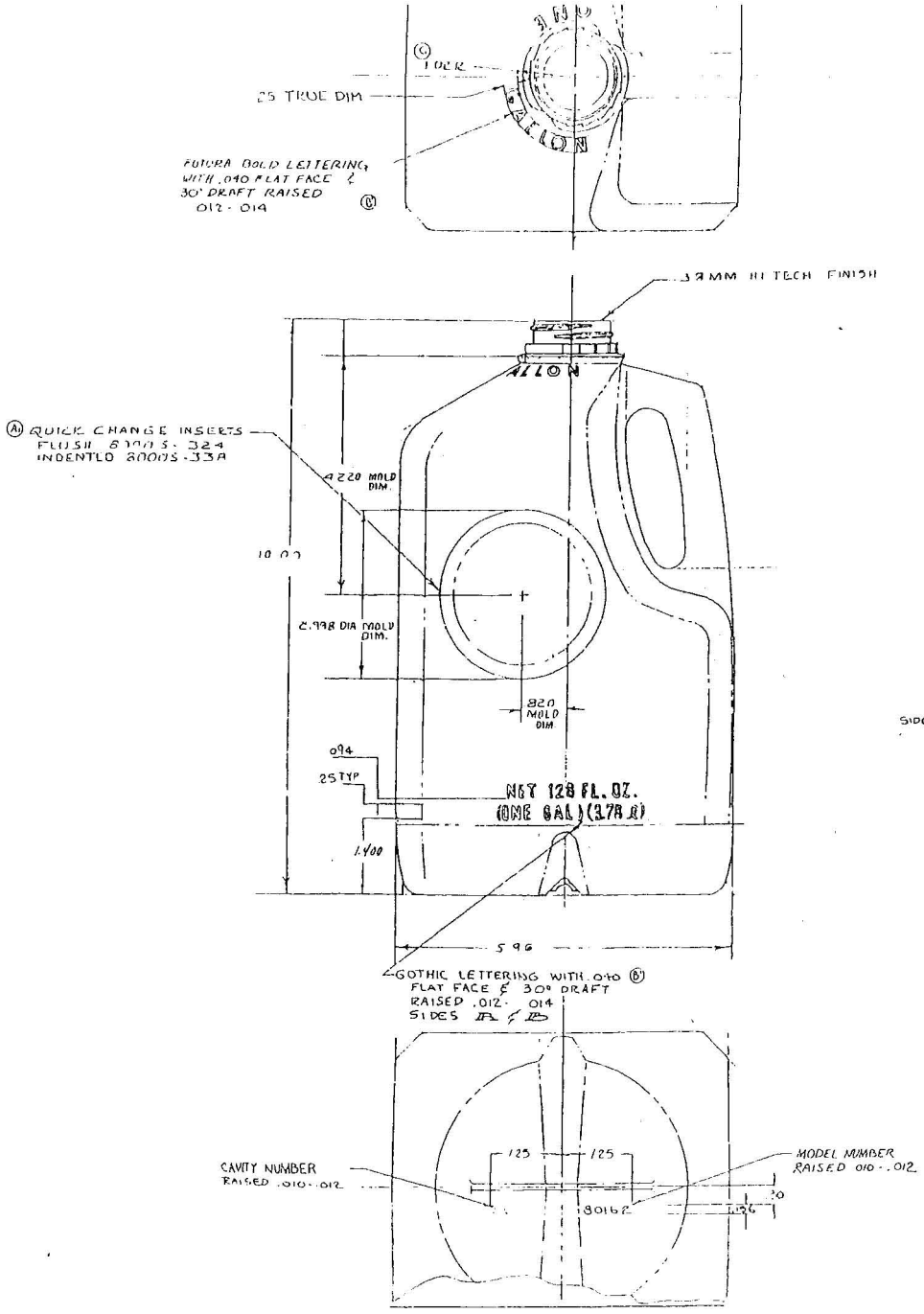


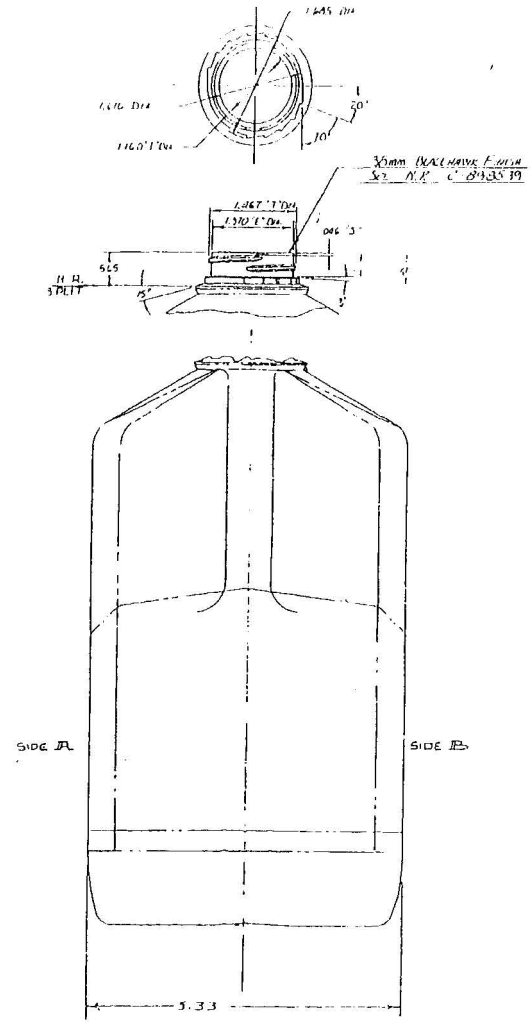


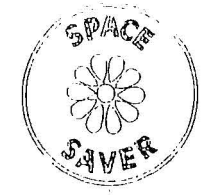


VOLUME INSERT, INDENTED & ENGRAVING
REF DWG A-80005-575
(E)

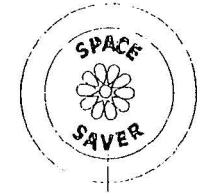


VOLUME INSERT, INDENTED & ENGRAVED
REF. DWG 1019-2-2 (½ OZ DISPLACE)
(E)

CONTAINER WEIGHT 65 - 70 GM
DESIGN CAPACITY 128 FL. OZ. & 3 OZ. O
AT PT .50 DIAM FROM TOP OF FINISH

The CARY COMPANY Est. 1895

| LET | DATE | DESCRIPTION | BY |
|---|---|---|---|
| E | 1/20/04 | ADDED INSERTS | RT |
| D | 10/31/03 | ADDED FINISH | FS |
| C | 2/11/98 | DIM ADDED | RP |
| B | 10/31/97 | LETTERING ADDED | JC |
| A | 6/11/97 | AS INSERT | RT |

| | | | | | | | | | |
|---|---|---|---|---|---|---|---|---|---|
| | 020 | | | | 031 | | 041 | | |
| | 021 | | 026 | | 032 | | 042 | | |
| | 022 | | 025 | | 034 | | 031 | | |
| | 023 | | 028 | | 038 | | 037 | | |
| | 029 | | | | | | | | |

RELEASED DATE
FOR W.O. NO.
UNLESS OTHERWISE NOTED: 1 PLACE ± .100; 2 PLACE ± .020; 3 PLACE ± .005
MATERIAL
HEAT TREATMENT
HARDNESS
STOCK SIZE
CH. SPECIFIC
PART NAME WESTON GENERAL DWG 128 FL OZ - 1 QT
SIZE 80162 C