IF YOU... MIX IT. FILL IT. PACK IT. SHIP IT.

WE HAVE A PRODUCT FOR YOU

15 Gallon Purple Plastic Tight Head Drum with 2″ & 3/4″ Fittings

Product Category: Tight Head Plastic Drums

Part #	56B1CP
Capacity	15 gal.
Condition	New
Color	Purple
Material	LLDPE
Closure	Tight Head (Closed)
Dimensions	15-1/4″Dia. x 22-1/2″H (Outside Dimensions)
Pallet Pack	24 ea.

The CARY COMPANY Est. 1895

1195 W. Fullerton Ave. | Addison, IL 60101 | T: 630.629.6600 | F:630.629.3690 | TheCaryCompany.com

Super Shipper
15 gallon Closed Head Drum

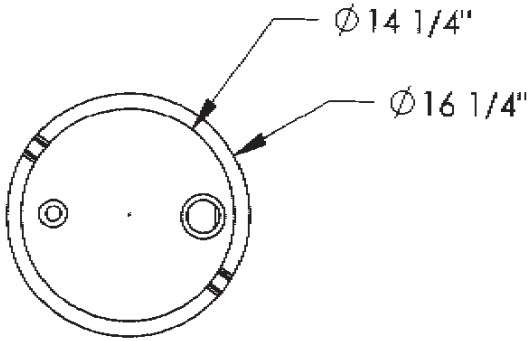

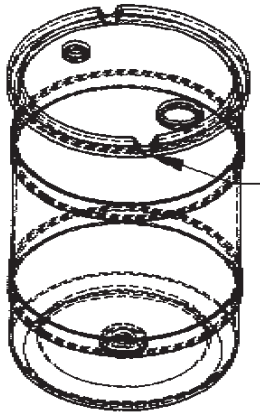

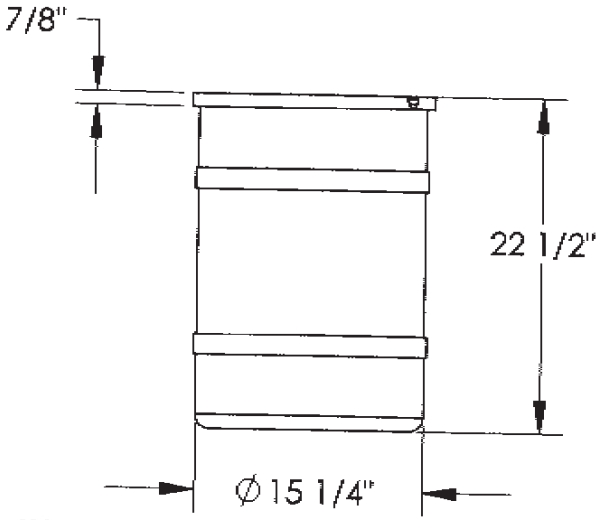

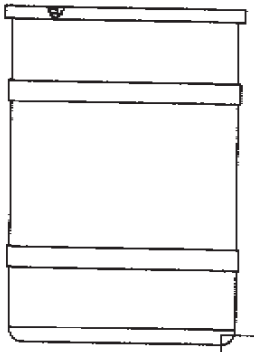

Standard Colors: Blue, Natural white, Black, Yellow, Red, Green

Empty Weight: 8 lbs

Openings: 2" and 3/4" NPT Threaded (2" and 3/4" NPT plugs included)

Actual Capacity: 17 gallons,

Wall Thickness: 3/16" (.1875") nominal
Stack three high with pallets between drums

Handle with parrot beak, side grabber or sling

PROPRIETARY AND CONFIDENTIAL

All Dimensions Are In Inches

The CARY COMPANY Est. 1895
PH 630-629-6600 - FX 630-629-3690
1195 W. FULLERTON AVE. - ADDISON, IL 60101
WWW.THECARYCOMPANY.COM

MATERIAL
L.L.D. Polyethylene

FINISH
Smooth

Approval		
Dept.	NAME	DATE

TITLE: SS CH 15

SIZE	DWG. NO.	REV
A		

ANDREW SEARLES | SHEET 1 OF 1

5 4 3 2 1