IF YOU... MIX IT. FILL IT. PACK IT. SHIP IT.

WE HAVE A PRODUCT FOR YOU

35 Gallon Orange Plastic Tight Head Drum with 2" & 3/4" Fittings

Product Category: Tight Head Plastic Drums

Part #	56B4CO
Capacity	35 gal.
Condition	New
Color	Orange
Material	LLDPE
Closure	Tight Head (Closed)
Dimensions	19-1/2"Dia. x 31-1/4"H (outside dimensions)
Pallet Pack	10 ea.

The CARY COMPANY Est. 1895

1195 W. Fullerton Ave. | Addison, IL 60101 | T: 630.629.6600 | F:630.629.3690 | TheCaryCompany.com

Super Shipper
35 gallon Closed Head Drum

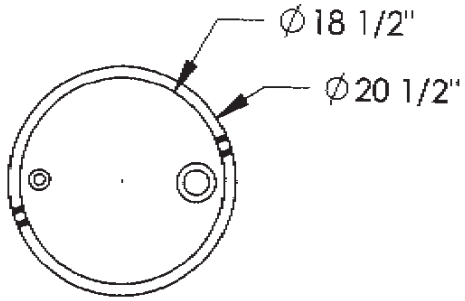

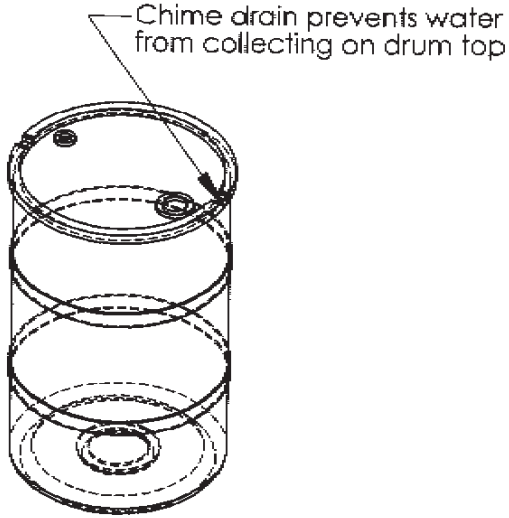

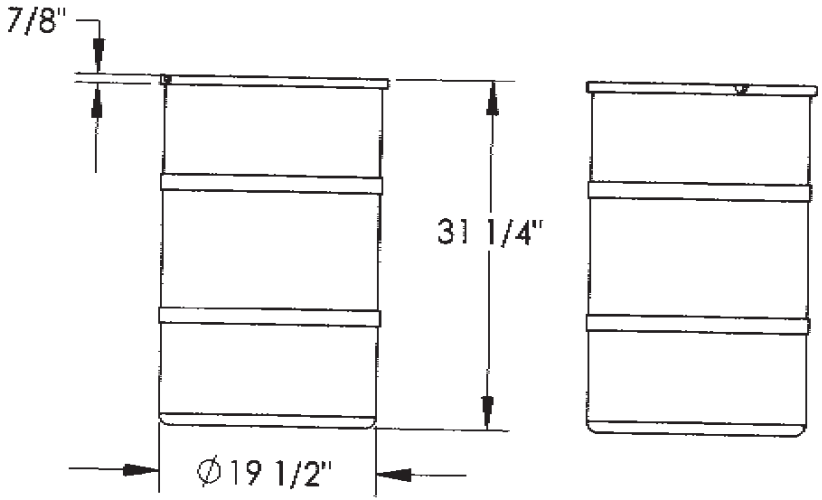

Standard Colors: Blue, Natural white, Black, Yellow, Red, Green

Empty Weight: 16 lbs

Openings: 2" and 3/4" NPT Threaded (2" and 3/4" NPT plugs included)

Actual Capacity: 40 gallons.

Wall Thickness: 3/16" (.1875") nominal

Stack three high with pallets between drums

Handle with parrot beak, side grabber or sling

PROPRIETARY AND CONFIDENTIAL

All Dimensions Are In Inches

The CARY COMPANY Est. 1895
PH 630-629-6600 - FX 630-629-3690
1195 W. FULLERTON AVE. - ADDSON, L 60101
WWW.THECARYCOMPANY.COM

MATERIAL
L.L.D. Polyethylene

FINISH
Smooth

Approval		
Dept.	NAME	DATE

TITLE: SS CH 35

SIZE	DWG. NO.	REV
A		

ANDREW SEARLES | SHEET 1 OF 1

5 4 3 2 1