IF YOU... MIX IT. FILL IT. PACK IT. SHIP IT.

WE HAVE A PRODUCT FOR YOU

Part #: 68WUFN

Plastic F-Style Bottles

1 Gallon Natural HDPE Plastic F-Style Bottle,
38mm 38-400, 4x1 Reshipper Box, UN Rated

The CARY COMPANY
Est. 1895

1195 W. Fullerton Ave. | Addison, IL 60101 | T: 630.629.6600 | F: 630.629.3690 |

REVISIONS			
REV.	DESCRIPTION	DATE	APPROVED
A	UPDATED CONTAINER TO REFLECT CUSTOMER MOLD PC1000 CAV#5	8/14/2008	SPK
B	UPDATED BOTTOM ENGRAVING	9/25/2008	SPK
C	140gr WAS 145gr	8/12/2015	SPK

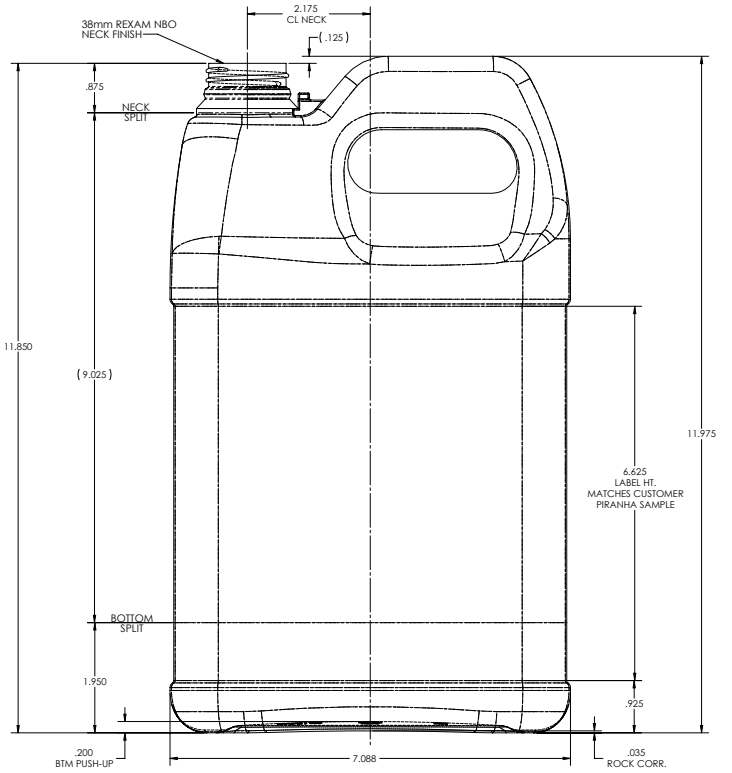

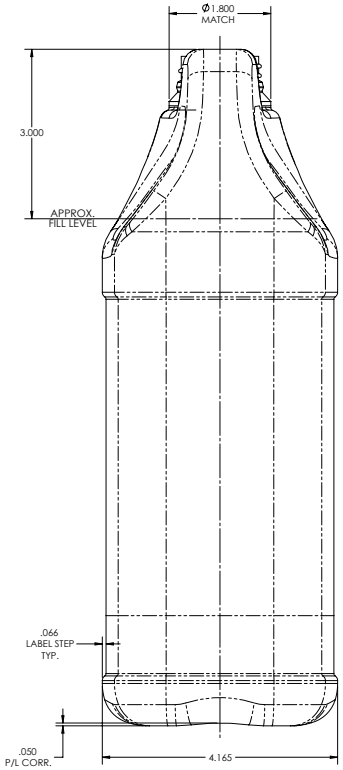

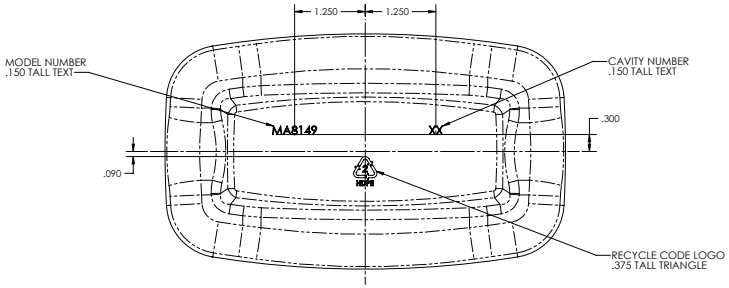

ALL ENGRAVING RAISED .008-.010

The CARY COMPANY Est. 1895

Notes:
1) Tolerances Unless Specified:
Vertical -- ±.080"
Horizontal -- ±.090"
Volumetric -- ±1.8 oz
2) Bottles to be Checked Aged with 20°c water
3) Estimated Bulge -- 3.1 oz
4) This Drawing is for Manufacturing Bottoms only.

PROPRIETARY AND CONFIDENTIAL

THE INFORMATION CONTAINED IN THIS DRAWING IS THE SOLE PROPERTY OF THE CARY COMPANY. ANY REPRODUCTION IN PART OR AS A WHOLE WITHOUT THE WRITTEN PERMISSION OF THE CARY COMPANY. IS PROHIBITED.

Drawn By: SPK	Date: 8/11/08	Container Data:	
Checked: MJS	Date: 8/11/08	Weight: 140 grams ©	
Customer: Polycon	Job# : 8717	Fill Level Capacity: 128oz	
Reference Materials: MA-P-0832 RevA MOLD# PC1000 CAV#5		Overflow Capacity: 140oz	
		Material: HDPE	
		Avg. Wall Thickness	

Description: Product Drawing 128oz F-Style

Size: D Scale: 1:1 | Drawing Number: MA8149-2 | REV C | SHEET 1 OF 1