IF YOU... MIX IT. FILL IT. PACK IT. SHIP IT.

WE HAVE A PRODUCT FOR YOU

CPII Low-Profile Pallet Jack, 21″ x 42″ (4,400 lbs.)

Product Category: Pallet Jacks & Pallet Trucks

Part #	26BC42
Color	Green
Material	Steel
Weight	235 lbs.
Load Capacity	4,400 lbs.
Fork Width & Length	21″ x 42″
Raised Height	6.25″
Lowered Height	2.125″
Fork Width	7″

The CARY COMPANY Est. 1895

1195 W. Fullerton Ave. | Addison, IL 60101 | T: 630.629.6600 | F:630.629.3690 | TheCaryCompany.com

278142

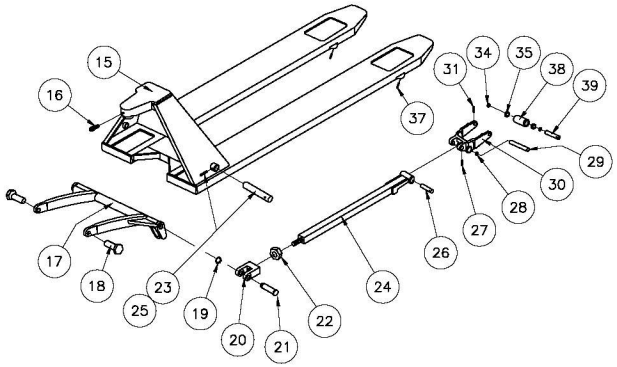

CPII LOWBOY PALLET JACK

- Many features are the same as CPII
- Lowered height of 2.125"
- Raised height of 6.25"
- 3 year pump warranty.
- 7" wide forks.
- 7" Moldon Polyurethane steering wheels.
- 2" steel load wheels.
- 46.5" O.A.H

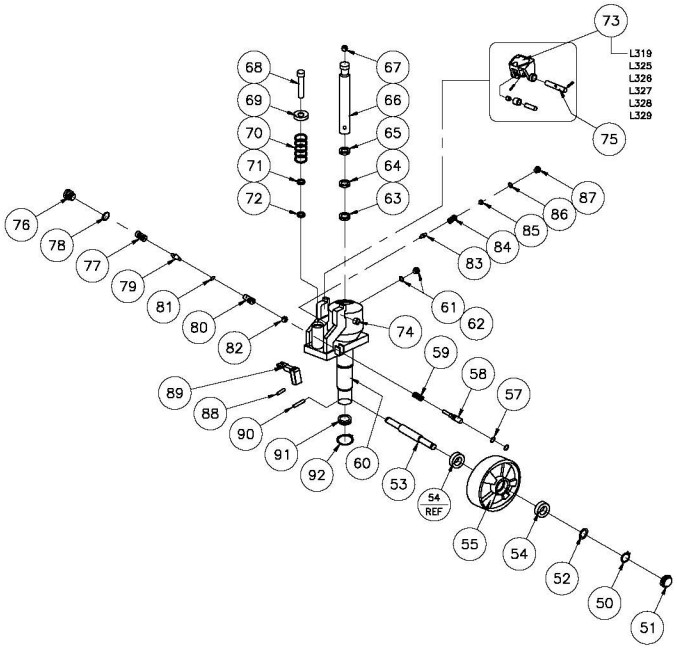

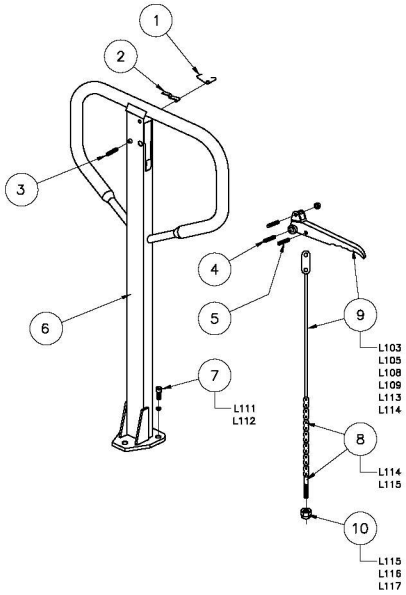

JACK PARTS LIST

50	272789	L301	LARGE RETAINER RING	2
51	272793	L302	HUB CAB (POLY WHL.)	2
52	272794	L303	WASHER (POLY WHL.)	2
53	272795	L304	AXLE OF STEERING WHEEL	1
54	272325	L305	BEARING	4
55	272785	L306	WHEELS (POLY)	2
56	272794	L307	WASHER	2
57	273013	L308	O-RING	2
58	273014	L309	RELEASE VALVE	1
59	273015	L310	SPRING	1
60	272779	L311	PUMP BODY	1
61	273016	L312	SEAL WASHER	1
62	273017	L313	BOLT	1
63	273018	L314	Y-SEAL	1
64	273019	L315	Y-SEAL	1
65	273020	L316	WIPER	1
66	273021	L317	LIFT PISTON	1
67	273022	L318	STEEL BALL	1
68	272797	L320	PUMP PISTON	1
69	272310	L321	CAP OF PISTON	1
70	272790	L322	SPRING	1
71	272798	L323	WIPER	1
72	272799	L324	Y-SEAL	1
73	**272773**		**KIT: BRACKET ASS'Y**	1
		L319	BRACKET	1
	272774	L325	AXLE OF ROLLER	1
	272075	L326	PRESSURE ROLLER	1
	272085	L327	BUSHING	1
	272090	L328	ELASTIC PIN	1
	272082	L329	ELASTIC PIN	1
74	273008	L330	BUSHING	1
75	274086	L331	AXLE WITH HOLE	1
76	273004	L332	PLUG BOLT	1
77	273006	L333	SPRING	1
78	273005	L334	SEAL WASHER	1
79	273003	L335	VALVE PIN	1
80	273002	L336	VALVE	1
81	273007	L337	O-RING	1
82	273001	L338	STEEL BALL	1
83	272099	L339	SAFE VALVE PIN	1
84	273026	L340	SPRING	1
85	273027	L341	ADJUSTING BOLT	1
86	272028	L342	O-RING	1
87	272029	L343	PLUG BOLT	1
88	273009	L344	ELASTIC PIN	1
89	273010	L345	LEVER	1
90	273011	L348	ELASTIC PIN	1
91	272100	L349	THRUST BEARING	1
92	273012	L350	SNAP RING	1
93	**274082**		**SEAL KIT**	1
94	**272780**		**COMPLETE REPLACMENT PUMP**	1

HANDLE PARTS LIST (Type "A")

1	274076	L101	SPRING	1
2	274083	L102	BLADE SPRING	1
3	272453	L104	ELASTIC PIN	1
4	272043	L106	ELASTIC PIN	1
5	272322	L107	ELASTIC PIN	1
6	274075	L110	HANDLE	1
7	**274079**		**KIT: BOLT/ELASTIC WASHER**	1
		L111	HANDLE	3
		L112	ELASTIC PIN	3
8	**272454**		**KIT: CHAIN/PIN**	1
		L114	CHAIN	1
		L115	PIN	1
9	**272791**		**KIT: CONTROL HANDLE**	1
	274001	L103	ROLLER	1
	272042	L105	ELASTIC PIN	1
		L108	CONTROL HANDLE	1
	274084	L109	PULL BOARD	1
		L113	PULL ROD	1
		L114	PULL BOARD	1
10	**274087**		**KIT: RELEASE ASSEMBLY**	1
		L115	PIN	1
	272456	L116	ADJUSTING BOLT	1
	272337	L117	ADJUSTING NUT	1

FORK FRAME PARTS LIST

15	272672	201SL	FORK FRAME	1
16	272673	202SL	BOLT	1
17	272674	203SL	ROCK ARM	1
18	272675	204SL	BOLT	2
19	272676	205SL	RETAINING RING	2
20	272677	206SL	JOINT	2
21	272678	207SL	BOLT	2
22	272679	208SL	NUT	2
23	272680	209SL	ELASTIC PIN	2
24	272681	210SL	PUSHING ROD	2
25	272682	211SL	LONG SHAFT	2
26	272683	212SL	SHAFT	2
27	272684	213SL	ELASTIC PIN	2
28	272685	214SL	WASHER	2
29	272686	215SL	SHAFT	2
30	272687	216SL	FRAME OF ROLLER	2
31	272688	217SL	ELASTIC PIN	2
32	N/A	218SL	LINK PLATE	
33	N/A	219SL	SHAFT FOR ROLLER	
34	272689	220SL	WASHER	4
35	272690	221SL	BEARING	2
36	N/A	222SL	ROLLER	
37	272691	223SL	ELASTIC PIN	4
38	272692	224SL	ROLLER	2
39	272693	225SL	SHAFT OF ROLLER	2

Wheel: Polyurethane
Fork: 21" x 42"
Weight: 235 lbs
Capacity: 4,400 lbs

PRINT ISSUED
DEC 1, 2006

The CARY COMPANY
Est. 1895

REV.	CHK & DATE	APP.	REVISIONS

PART NAME: CPII: LOWBOY 21X42 PALLET TRUCK
TOLERANCE UNLESS OTHERWISE SPECIFIED: FRACTION ± 1/64; 3 PLACE DECIMAL ± .005; 2 PLACE DECIMAL ± .01; ANGULAR ± 1-1/2°
SHEET 1 OF 1
BREAK ALL SHARP EDGES AND REMOVE ALL BURRS
DRAWN: KL 11-22-06
CHECKED:
APP. ENGR.
SCALE: 1" = 2"
REV