# IF YOU... MIX IT. FILL IT. PACK IT. SHIP IT.

# WE HAVE A PRODUCT FOR YOU

Part # 30WBCO

Beer Bottle Caps

## Orange Beer Bottle Caps, Oxygen Absorbing, 26 mm Crown Pry-Off, 144/pk

The CARY COMPANY Est. 1895

1195 W. Fullerton Ave. | Addison, IL 60101 | T: 630.629.6600 | F:630.629.3690 | TheCaryCompany.com

The CARY COMPANY
Est. 1895

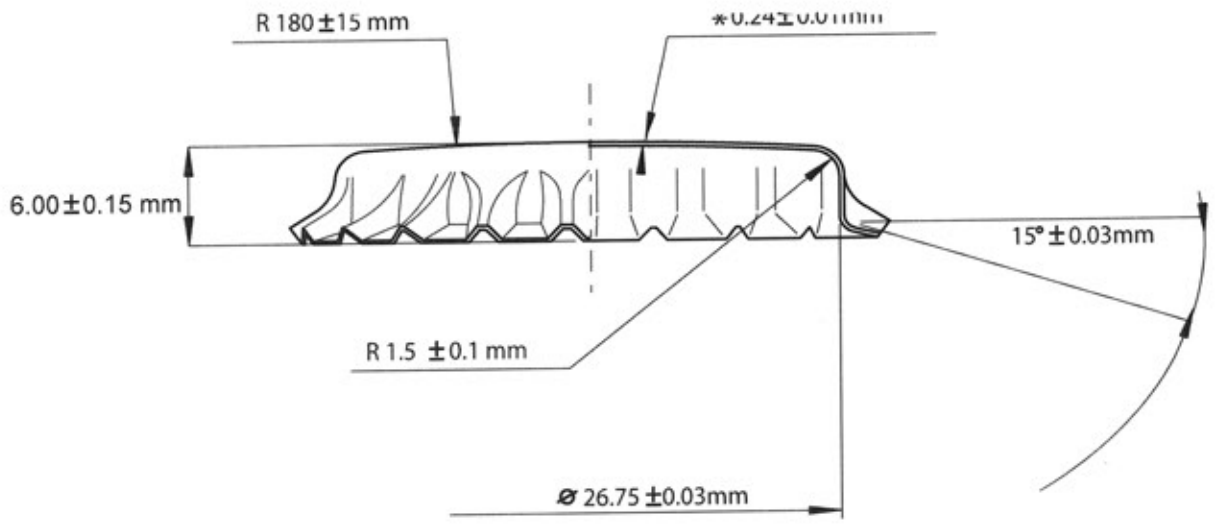


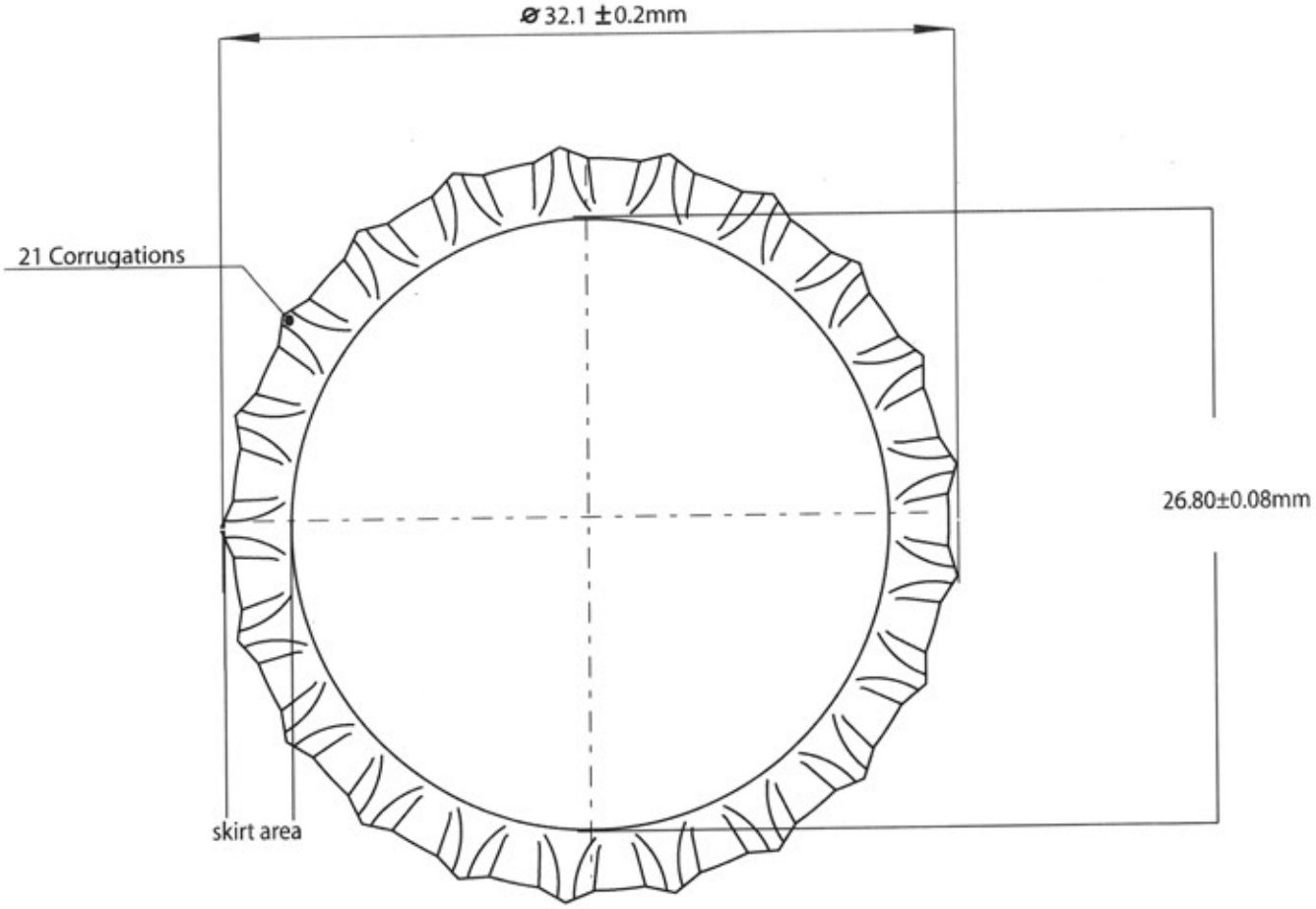
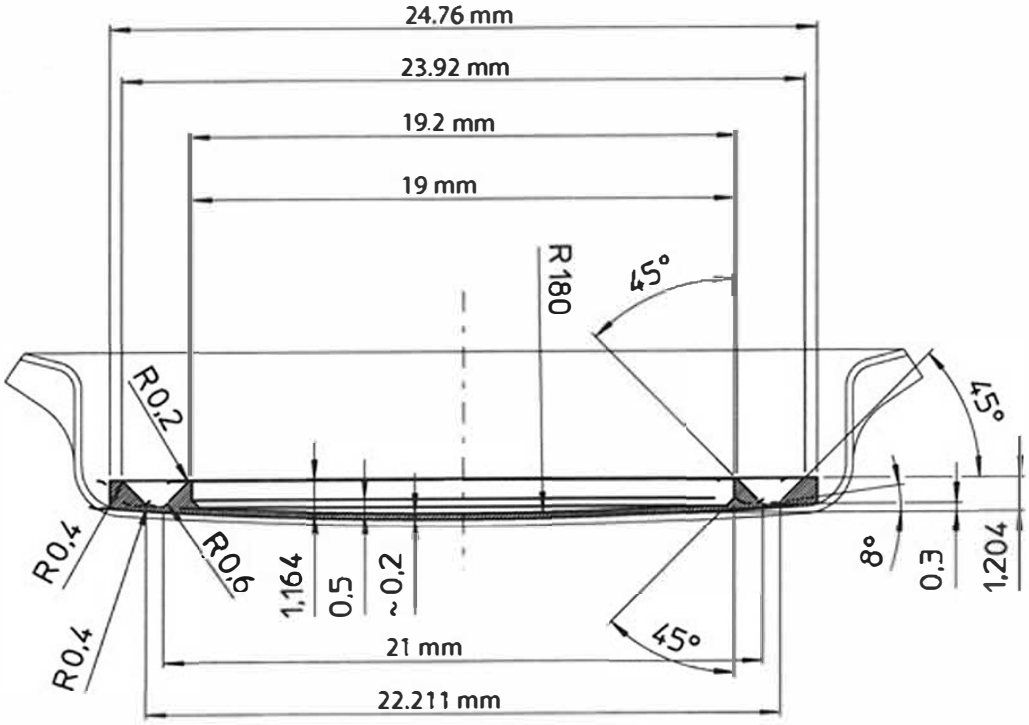
The CARY COMPANY
Est. 1895