IF YOU... MIX IT. FILL IT. PACK IT. SHIP IT.

WE HAVE A PRODUCT FOR YOU

Part # 30WBRO

4 oz. Natural LDPE Plastic Boston Round Bottle, 24mm 24-410

The CARY COMPANY Est. 1895

1195 W. Fullerton Ave. | Addison, IL 60101 | T: 630.629.6600 | F:630.629.3690 | TheCaryCompany.com

Supplied By: **The Cary Company**
Ph: 630-629-6600
www.thecarycompany.com

The CARY COMPANY
Est. 1895

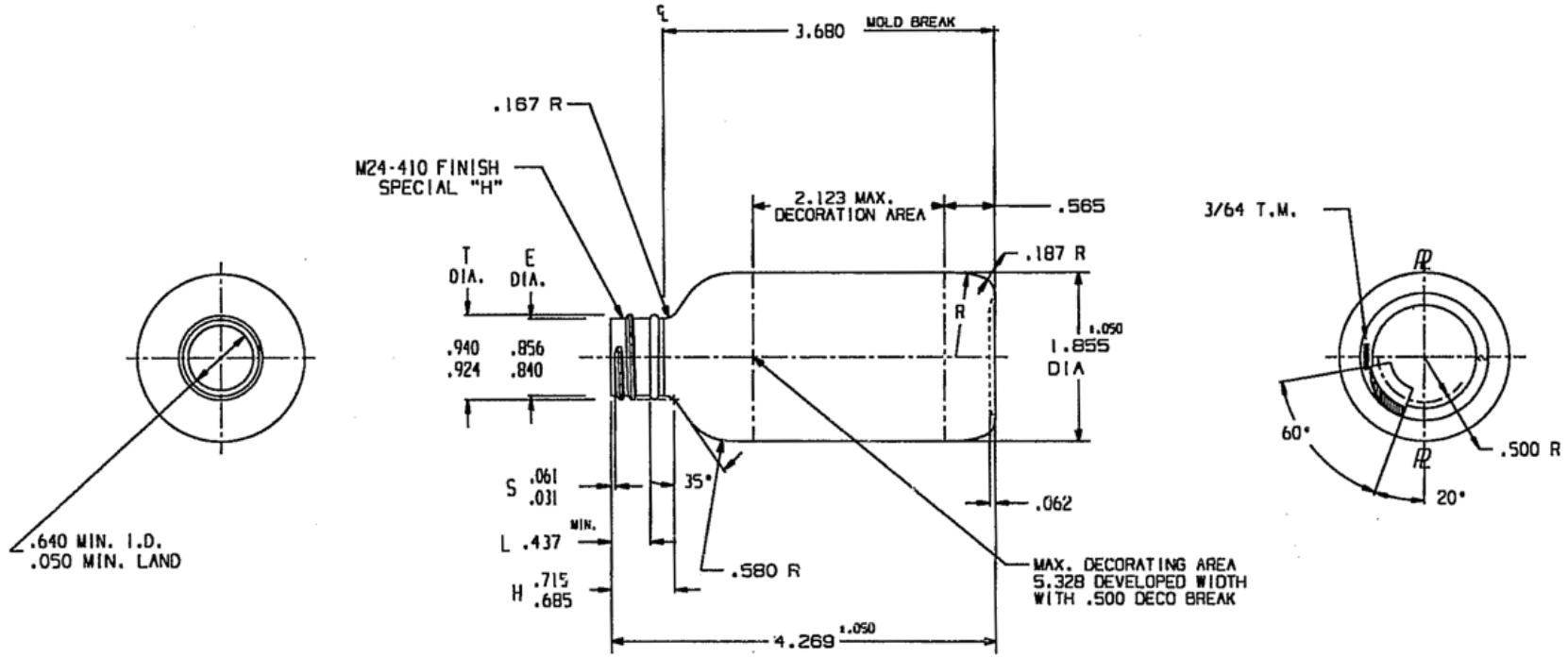

NOTES :

1) OVERFLOW CAPACITY : 4.60 ± .17 FL.OZ. (136.0 ± 5.0 CC'S.)

2) WEIGHT : 16.75 ± 1.0 GRAMS

K	REMOVED TD31-12813 & CHART/UPDATED TO SILGAN STDS	8FEB01	KENT
LTR	DESCRIPTION	DATE	APPROVED
REVISIONS			

2	LDM-65422
1	LDM-84000
CODE CHART	

DIMENSIONS SHOWN ARE:
☐ AS MOLDED ☒ AFTER TREAT
☐ AFTER TREAT & DECO

DRAWN BY LMT	MATERIAL LDPE	CUSTOMER
DATE 3/12/80	QUOTE NO.	DESCRIPTION 4 FL. OZ. BOSTON ROUND
	LABEL DWG. NO.	
INFO.	REF. DWG. NO. MC9-8839-0	
	TOOLING NO. TD31-11428	
CAD UG	CODE NO. SEE CHART	
SCALE FULL	SURF. AREA	DRAWING NO. MC-9-8869-K