IF YOU... MIX IT. FILL IT. PACK IT. SHIP IT.

WE HAVE A PRODUCT FOR YOU

1 Gallon Natural HDPE Plastic Wide Mouth Jar, 110mm 110-400, 4x1 Reshipper Box

Product Category: Plastic Wide Mouth Jars

Part #	30WU28
Capacity	128 oz., 1 Gal.
Color	Natural
Material	HDPE
Dimensions	6.075"Dia. x 9.81"H
Label Panel Dimensions	19.09"L x 5.54"H
Neck Finish	110-400
Neck Width	110mm
BPA Free	Yes
FDA Approved	Yes
Case Pack	4 ea.
Pallet Pack	192 ea. (48 Cases)
Note	Packed in a 4x1 Reshipper Carton 4/bx

The CARY COMPANY Est. 1895

1195 W. Fullerton Ave. | Addison, IL 60101 | T: 630.629.6600 | F:630.629.3690 | TheCaryCompany.com

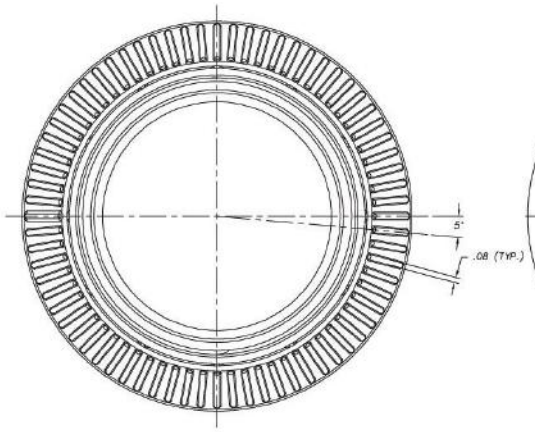

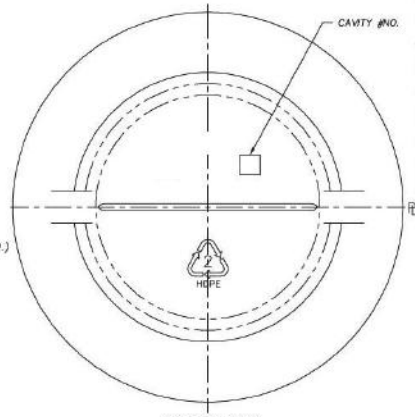

BOTTOM VIEW

BOTTLE W/NECK FINISH	GRAM WEIGHT	VOLUME	BOTTLE HEIGHT
GALLON/110mm SNAP-CAP	90 ±4	135.2 ±1.5	10.805 ±.080
GALLON/100mm SP-400 "DEANS"	90 ±4	133.5 ±1.5	10.112 ±.080
GALLON/100mm SP-400 "DEANS"	100 ±4	135 ±1.5	10.112 ±.080
GALLON/110mm CAP-SNAP	90 ±4	135 ±1.5	9.830 ±.060
GALLON/110mm ALCOA	90 ±4	135 ±1.5	9.830 ±.060
GALLON/89mm SP-400	90 ±4	134.2 ±1.5	9.830 ±.060
GALLON/110mm ALCOA	95 ±4	135 ±1.5	9.830 ±.060
GALLON/110mm SP-400 (CT)	90 ±4	135 ±1.5	XXXX ±.080

NOTES:

1. STATED VOLUME IS NOMINAL ONLY AND WILL VARY ACCORDING TO BOTTLE WEIGHT. FOR TOLERANCE RANGE REF. ASTM SPEC D-2911.

2. WEIGHT RANGE FOR THIS WIDE MOUTH CONTAINER MAY VARY BETWEEN 80 AND 100 GRAMS DUE TO CUSTOMER SPECIFICATIONS.

3. CONTAINER MANUFACTURED IN PLANTS #2

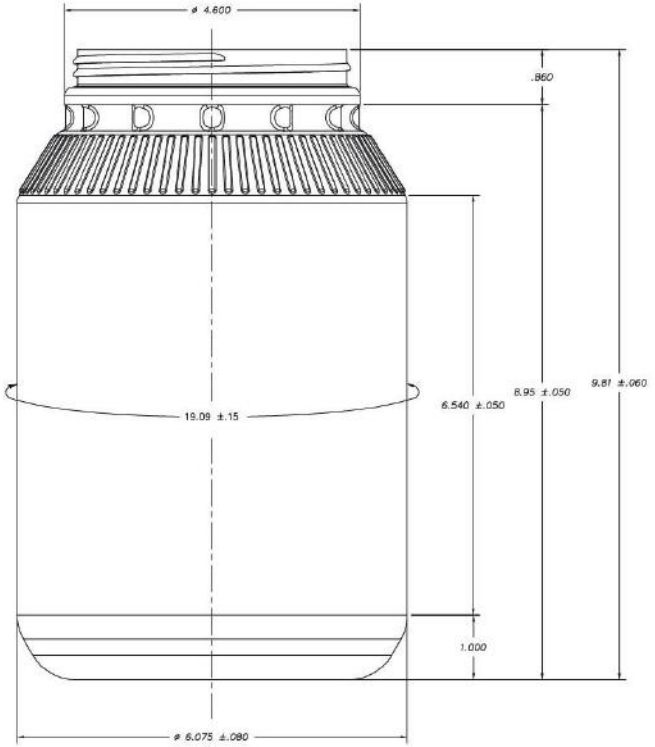

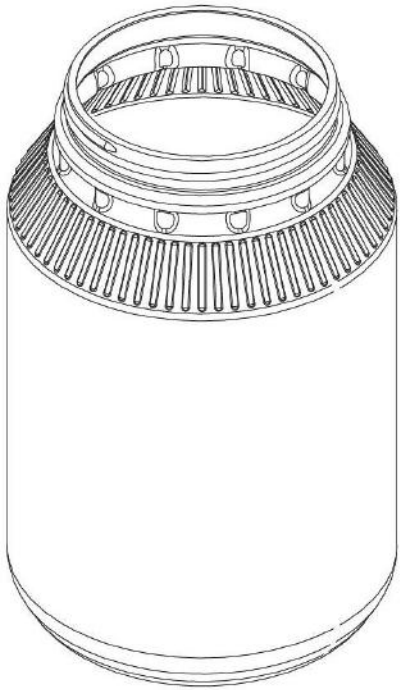

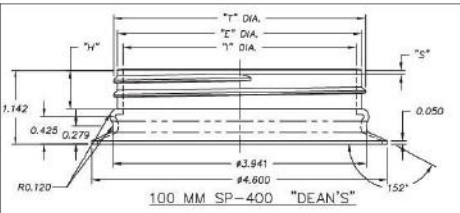

100 MM SP-400 "DEAN'S"

"T" DIA.	3.937/3.902
"E" DIA.	3.817/3.782
"I" DIA.	3.630 APPROX.
"S" DIA.	.075/.045
"H" DIA.	.612/.582

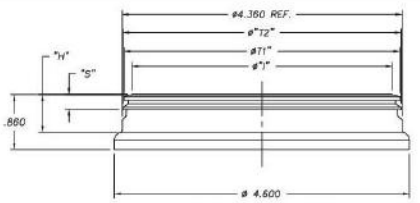

110 MM CAP SNAP

"T1" DIA.	4.307/4.283
"T2" DIA.	4.342/4.318
"I" DIA.	4.067/4.043
"S" DIA.	.235/.219
"H" DIA.	.527/.503

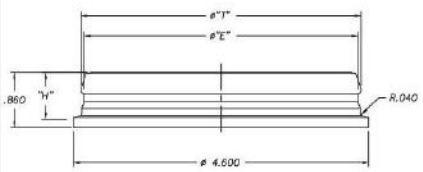

110 MM ALCOA

"T" DIA.	4.383/4.359
"E" DIA.	4.272/4.248
"I" DIA.	3.986/3.974
"S" DIA.	
"H" DIA.	.744/.714

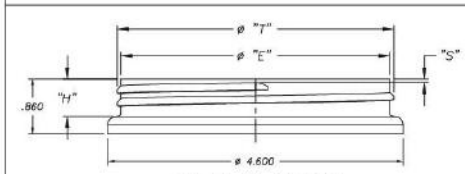

110 MM SP-400 (CT)

"T" DIA.	4.313 ±.0175
"E" DIA.	4.193 ±.0175
"I" DIA.	3.737 ±.0175
"S" DIA.	.060 ±.015
"H" DIA.	.597 ±.015

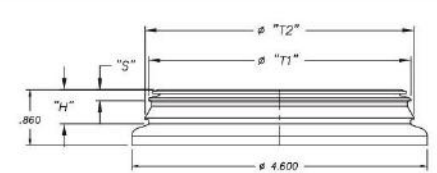

110 MM CAP SNAP (XLM)

"T2" DIA.	4.190 ±.012
"T1" DIA.	4.086 ±.012
"I" DIM.	3.716 ±.012
"S" DIM.	.164 ±.066
"H" DIM.	.525 ±.012
BTL. MIN. WALL	.008

LTR	DESCRIPTION	DATE	WRITTEN BY	USED ON	NEXT ASSY	QTY
A	ADDED CHART, (CT) NECK FINISH, 95 g 110 ALCOA NECK FINISH	012904	R2			

PART NO. AT P/N | FILE: 1026300D | DISK: ENGSER

MATERIAL: H.D.P.E. | FINISH:

30WU28

DRAWN: A.PLATACIS DATE: 8-31-00 | CHECKED: DATE:

PLANT LOCATION | SCALE: 1=1

TITLE: WIDE MOUTH GALLON-2000 PLANT #2 CUSTOMER DRAWING

SHEET 1 OF 1 | REV A

Supplied By: **The Cary Company**
Ph: 630-629-6600
www.thecarycompany.com