IF YOU... MIX IT. FILL IT. PACK IT. SHIP IT.

WE HAVE A PRODUCT FOR YOU

Superfos® 12 oz. Clear PP Plastic Safe Lock Tamper Evident Container L406

Product Category: Tamper Evident Containers

Part #	34BC12
Capacity	12 oz.
Color	Clear
Neck Finish	L406
Material	PP
Closure	Safe Lock Lid
Label Panel Dimensions	1.3"x 13.05" less .25" Gap in
Dimensions	4.7"Dia. x 2.3"H
Case Pack	500 ea.
Pallet Pack	4,000 ea. (8 Cases)

The CARY COMPANY Est. 1895

1195 W. Fullerton Ave. | Addison, IL 60101 | T: 630.629.6600 | F:630.629.3690 | TheCaryCompany.com

LET	REVISION DESCRIPTION	BY	ECN #	DATE

TOLERANCES & NOMINALS WILL BE DETERMINED AFTER C,Q,V PROCESS STUDY

Supplied By: **The Cary Company**
Ph: 630-629-6600
www.thecarycompany.com

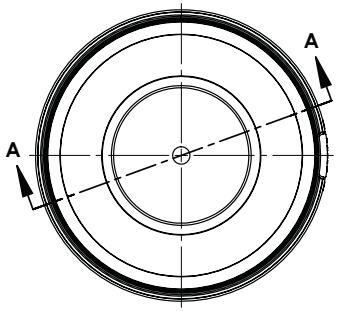

TOP VIEW

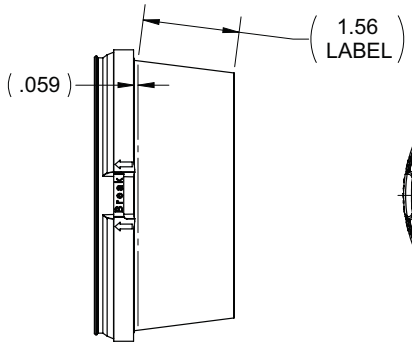

SIDE VIEW

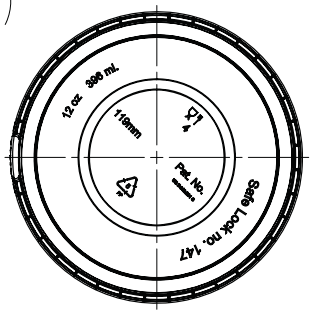

BOTTOM VIEW

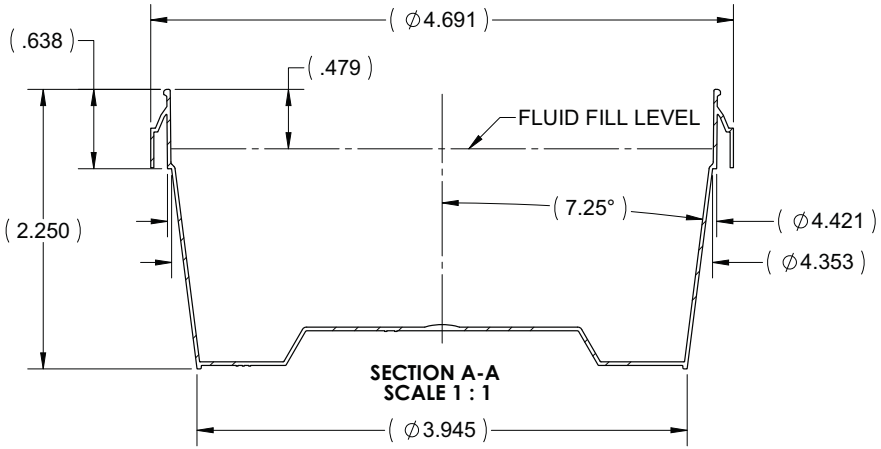

SECTION A-A
SCALE 1 : 1

NESTING VIEW

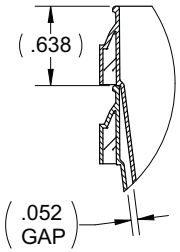

PART DATA	
RESIN FAMILY	PP
RESIN DENSITY (GRAMS/CUBIC IN)	14.9
ACTUAL WEIGHT ±0.0 (GRAMS)	0.0
ESTIMATED WEIGHT (CAD MODEL GRAMS)	22.2
VOLUME (CUBIC IN)	28.8
OVERFLOW CAPACITY(OZ)	16.0
OVERFLOW CAPACITY(CC)	472.6
FILL LEVEL CAPACITY (OZ)	12.0
FILL LEVEL CAPACITY (CC)	354.9

.XXX ARE BASIC DIMENSIONS
(.XXX) ARE REFERENCE DIMENSIONS
.XXX ARE INSPECTION DIMENSIONS

THIS DRAWING IS NOT A CONTROLLED DOCUMENT IF PRINTED OR COPIED FROM THE APPROVED LOCATION

THIS IS A PRELIMINARY PRODUCT DRAWING, SPECIFICATIONS ARE SUBJECT TO CHANGE (IN DEVELOPMENT).

CONFIDENTIAL

PRODUCT NAME:	DRAWING TYPE:
T40612SLCP	**CUSTOMER**

DESCRIPTION: 12 oz IML TAMPER EVIDENT CONTAINER

FILE NAME:	PROJECT #:
CP-105212-PRT1	105212

CREATED BY:	CREATION DATE:	SHEET	DRAWING VERSION:	SCALE:	SHEET SIZE
DK	06/01/10	1 of 1	X.X	1:2	B