IF YOU... MIX IT. FILL IT. PACK IT. SHIP IT.

WE HAVE A PRODUCT FOR YOU

55 Gallon Black Plastic Drum

Product Category: Open Head Plastic Drums

Part #	56B5LK
Capacity	55 gal.
Condition	New
Color	Black
Material	LLDPE
Closure	Cover w/ Lever Lock Ring Closure
Dimensions	22-1/2"Dia. x 36"H (outside dimensions)
Pallet Pack	8 ea.

The CARY COMPANY Est. 1895

1195 W. Fullerton Ave. | Addison, IL 60101 | T: 630.629.6600 | F:630.629.3690 | TheCaryCompany.com

Super Shipper
55 gallon Open Head Drum

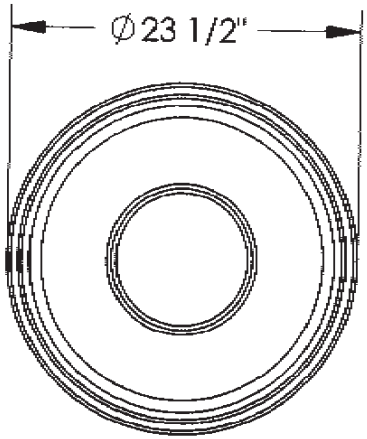

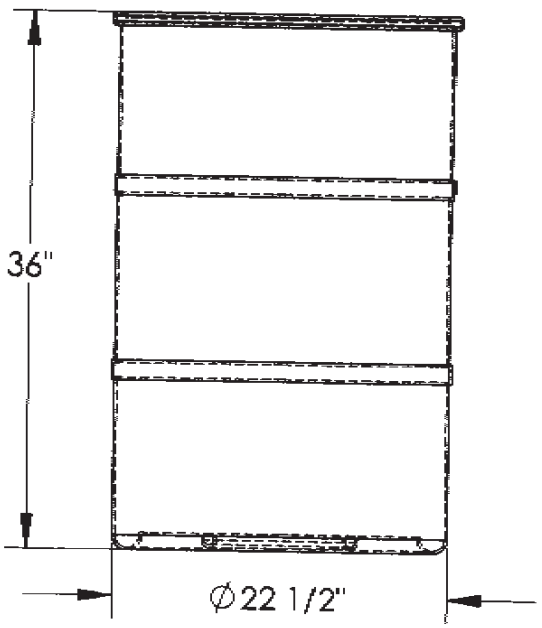

Standard Colors: Blue, Natural white, Black, Yellow, Red, Green

Empty Weight: 23 lbs

Actual Capacity: 62 gallons,

Wall Thickness: 3/16" (.1875") nominal
Stack three high with pallets between drums

Closed-cell Urethane Seal

Handle with side grabber or sling

Steel Compression Ring with Bolt or Lever-Action Closure

PROPRIETARY AND CONFIDENTIAL

The CARY COMPANY Est. 1895

P: 630-629-6600 | F: 630-629-3690
1195 W. Fullerton Ave. Addison, IL 60101
www.thecarycompany.com

MATERIAL
L.L.D. Polyethylene

FINISH
Smooth

Approval		
Dept.	NAME	DATE

TITLE:
SS OH 55

SIZE	DWG. NO.	REV
A		

ANDREW SEARLES | SHEET 1 OF 1

5 4 3 2 1