IF YOU... MIX IT. FILL IT. PACK IT. SHIP IT.

WE HAVE A PRODUCT FOR YOU

5 Gallon (18L) White Plastic Tight Head w/ Cap, 70mm, Open

Product Category: Plastic Tight Head Square & Retangular Containers

Part #	56WWTH
Capacity	5 gal.
Color	White
Material	HDPE
Closure	Tight Head (Closed)
Fittings	70mm (NPS, 8TPI)
Dimensions	11.16"L x 10.18"W x 14.21"H
UN Rating Liquid	UN3H1/Y1.8/150

The CARY COMPANY Est. 1895

1195 W. Fullerton Ave. | Addison, IL 60101 | T: 630.629.6600 | F:630.629.3690 | TheCaryCompany.com

□ –LAYOUT NUMBER
○ –CRITICAL CHARACTERISTIC
⊕ –KEY CRITICAL CHARACTERISTIC

OPTION	DRAWING	DESCRIPTION
A	7945 SHEET 2	PRIMARY NECK FINISH
B	7945 SHEET 2	SECONDARY NECK FINISH
C	7945 SHEET 2	NAMEPLATES
D	7945 SHEET 1 (NOTE 4)	OPTIONAL WALL THICKNESS

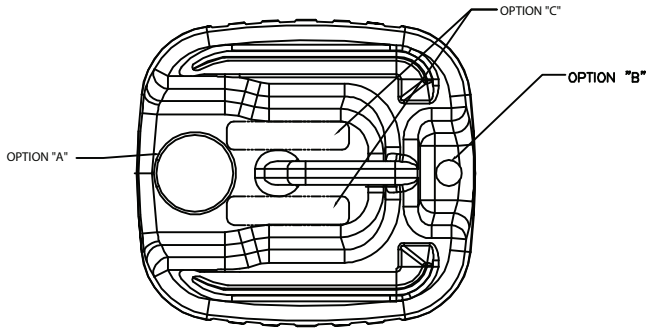

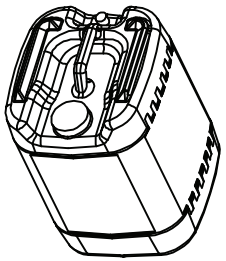

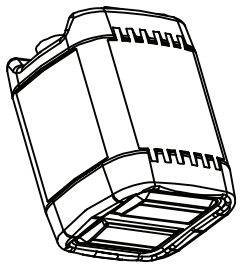

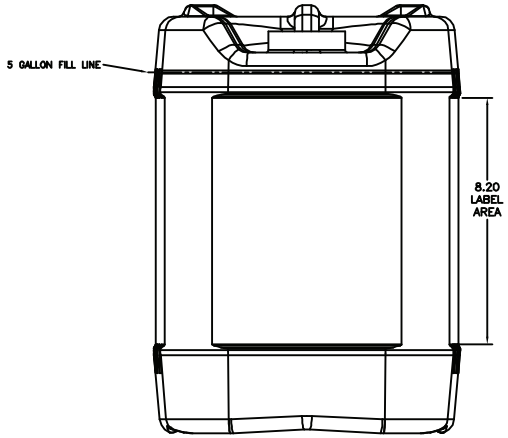

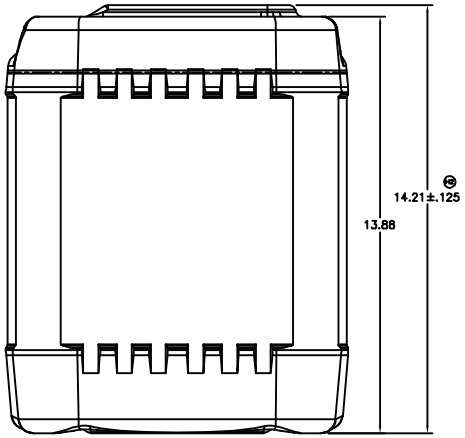

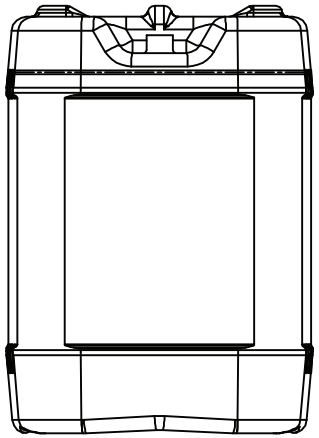

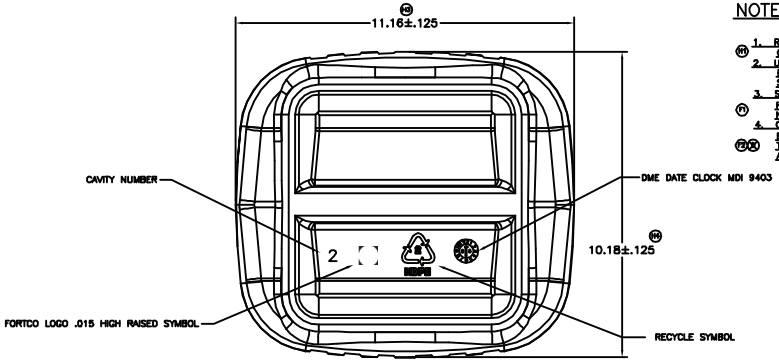

NOTES:

1. RATED CAPACITY: 5 GALLONS
   OVERFLOW CAPACITY: 5.1 GALLONS
2. UNLESS OTHERWISE SPECIFIED, SPI/PBI BODY DIMENSIONAL TOLERANCES APPLY. SEE PBI TECHNICAL BULLETIN PB02.
3. STANDARD MIN. WALL THICKNESS
   RELISABLE CONTAINER – .044
   NON–RELISABLE CONTAINER – PER UN CERTIFICATION
4. OPTIONAL MIN. WALL THICKNESS (IF SPECIFIED BY CUSTOMER)
   BOTTOM CORNERS – 0.055
   TOP CORNERS – 0.050
   ALL OTHER POINTS – 0.044

–	7/09	G	TWS SIG LOGO	TV
025–010	5/05	F	"C" 3.969/3.989 WAS 3.945/3.975	CS
–	3/05	G	ADD NECK OPTION "A"	CS
025–005	1/05	H	"C" 0.317/.38 WAS 0.35	CS
025–004	1/05	H	"L" 4.750/.770 WAS 4.795/.795	CS
024–034	12/04	L2	"C" 22.55MM WAS 22.31	CS
		L1	"F" 65.744/5.769 WAS 65.75/5.75	
024–028	12/04	E	"L" DIA. .625/.635 WAS .645/.655	CS
024–025	7/04	J	"K" DIA. .67–.75 WAS .65–.72	CS
–	6/04	I	UPDATED PRINT DIMENSIONS	CS
02–017	5/02	H4	10.18±.125 WAS 11.59	HC
		H3	11.16±.125 WAS 11.59	
		H2	14.21±.125 WAS 14.528	
		H1	ADDED OVERFLOW CAPACITY	
–	1/02	G	REMOVED MATERIAL	HC
–	12/01	F2	SPECIFIED OPTIONAL WALL THICK	HC
		F1	SPECIFIED STD. WALL THICKNESS	
–	11/01	E	CHANGED "K" DIA. TO 2.31	HC
–	7/01	D	ADDED "CH 7945–303–309"	HC
–	10/00	C	REDRAWN WAS 7945–300	DC
ECN.	DATE	MOD	REVISION	BY

DRAWN BY: DAC	DATE: 5/18/99	REVISED: 7/16/09	
CHECKED BY: TRV	DATE: –	SCALE FACTOR: 1:2	
TOLERANCES UNLESS OTHERWISE SPECIFIED:	MATERIAL: – – –	DRAWING DESCRIPTION: 5 GALLON CONTAINER (BM–184/185)	
DO NOT SCALE PRINT	ITEM NUMBER: 7945	SHEET 1 OF 2	DRAWING NUMBER: 7945

Supplied By: **The Cary Company**
Ph: 630-629-6600
www.thecarycompany.com

□ –LAYOUT NUMBER
Ⓞ –CRITICAL CHARACTERISTIC
● –KEY CRITICAL CHARACTERISTIC

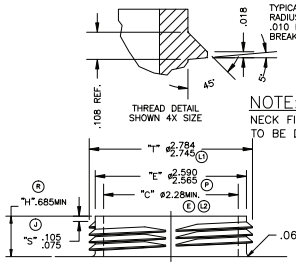

NOTE:
NEECK FINISH DETAIL TO BE DETERMINED

70MM SPECIAL NECK FINISH
"M" STYLE MODIFIED BUTTRESS
SEMI–INTERRUPTED THREADS (HANDLE SIDE)
3 FULL TURNS
8 THREADS PER INCH
SHOWN FULL SIZE
THREADS START 90° FROM PARTING LINE ON BOTH NECK CLOSURES

OPTION A1 – 70 mm NECK FINISH

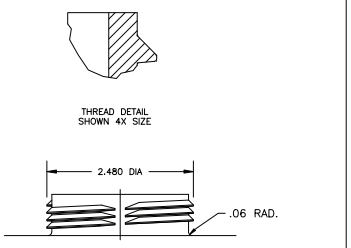

63MM SP–400 MODIFIED SPECIAL NECK FINISH
"M" STYLE MODIFIED BUTTRESS
SEMI–INTERRUPTED THREADS (HANDLE SIDE)
2–1/2 FULL TURNS
6 THREADS PER INCH
SHOWN FULL SIZE
THREADS START 90° FROM PARTING LINE ON BOTH NECK CLOSURES

OPTION A2 – 63 mm NECK FINISH

OPTION "A"

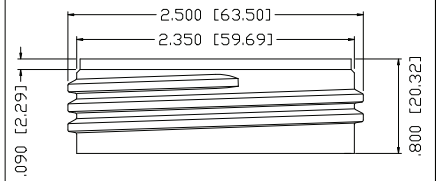

NECK OPTION ONE
SCALE x2

NECK FINISH: 63mm REIKE

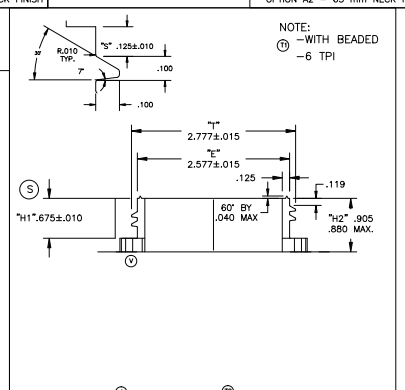

NOTE:
(T1) –WITH BEADED
–6 TPI

OPTION A4 – 70 mm SC–76RTE CLOSURE NECK FINISH RIEKE

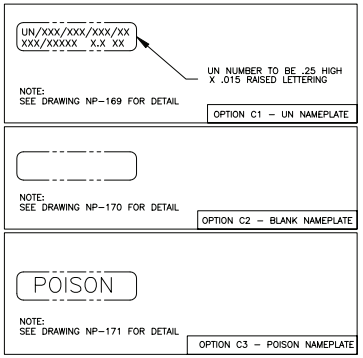

OPTION "C"

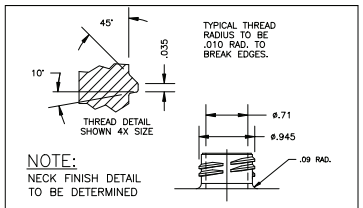

NOTE:
NECK FINISH DETAIL TO BE DETERMINED

24MM/415 NECK FINISH
"M" STYLE MODIFIED BUTTRESS
INTERRUPTED THREADS
2 FULL TURNS
8 THREADS PER INCH
SHOWN FULL SIZE
THREADS START 90° FROM PARTING LINE

OPTION B1 – 24 mm VENT

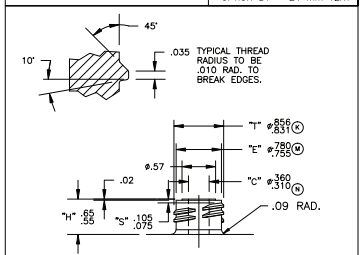

22MM SPECIAL NECK FINISH
"M" STYLE MODIFIED BUTTRESS
INTERRUPTED THREADS
2 FULL TURNS
8 THREADS PER INCH
SHOWN FULL SIZE
THREADS START 90° FROM PARTING LINE

OPTION B2 – 22 mm VENT

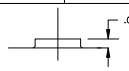

WITHOUT VENT CAP
SHOWN FULL SIZE

OPTION B3 – NON–VENTED

OPTION "B"

SP–400 (MODIFIED)
63MM CLOSURE
6 THREADS PER INCH
2–1/2 FULL TURNS
THREADS START 90° FROM PARTING LINE

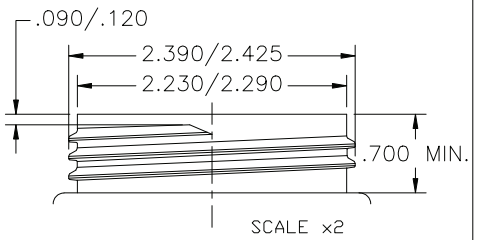

SCALE x2

NECK FINISH: 63mm NECK FORT PACK FINISH

EDN.	DATE	LET	CHANGE	BY
E09–006	7/09	V	ADDED RATCHET NECK FINISH	JP
E09–004	5/08	U	REMOVED OPTION A3–70MM	JP
	5/08	T2	ADDED RTE TO DESCRIPTION	JP
	5/08	T1	CHANGED TO A BEADED	JP
E08–005	8/08	S2	ADDED NOTE	TV
E08–005	8/08	S1	"H1" WAS .682±.010	TV
E08–008	8/08	R	"H" WAS .75/.67	TV
–	10/07	Q	ADD 63mm REIKE AND FORT PACK	KW
E05–010	5/05	P	"E" 2.585/2.580 WAS 2.546/2.572	ES
–	3/05	O	ADD NECK OPTION "A4"	ES
E05–005	1/05	N	"C" ø.31/.36 WAS ø.35	ES
E05–004	1/05	M	"E" ø.785/.780 WAS ø.765/.782	ES
E04–034	12/04	L2	"C" ø2.28MIN WAS ø2.31	ES
		L1	"T" ø2.744/2.783 WAS ø2.73/2.76	
E04–029	12/04	K	"T" ø.835/.855 WAS ø.840/.882	ES
E04–025	7/04	J	"H" DIM. .67/.75 WAS .68/.72	ES
–	6/04	I	UPDATED PRINT DIMENSIONS	ES
02–017	5/02	H4	10.18±.125 WAS 11.20	KE
		H3	11.16±.125 WAS 11.28	
		H2	14.21±.125 WAS 14.208	
		H1	ADDED OVERFLOW CAPACITY	
–	1/02	G	REMOVED MATERIAL	KE
–	12/01	F2	SPECIFIED OPTIONAL WALL THICK	KE
		F1	SPECIFIED STD. WALL THICKNESS	
–	11/01	E	CHANGED "C" DIM. TO 2.31	KE
–	7/01	D	ADDED "ON 7945–203–309"	KE
–	10/00	C	REDRAWN; WAS 7945–000	DC

Supplied By: **The Cary Company**
Ph: 630-629-6600
www.thecarycompany.com

DRAWN BY: DAC	DATE: 10/23/00	REVISED: 7/13/09	
CHECKED BY: JEP	DATE: –	SCALE FACTOR: 1:1	
TOLERANCES UNLESS OTHERWISE SPECIFIED:	MATERIAL: – – –	DRAWING DESCRIPTION: 5 GALLON CONTAINER (BM–184/185)	
DO NOT SCALE PRINT	ITEM NUMBER: 7945	SHEET 2 OF 2	DRAWING NUMBER: 7945