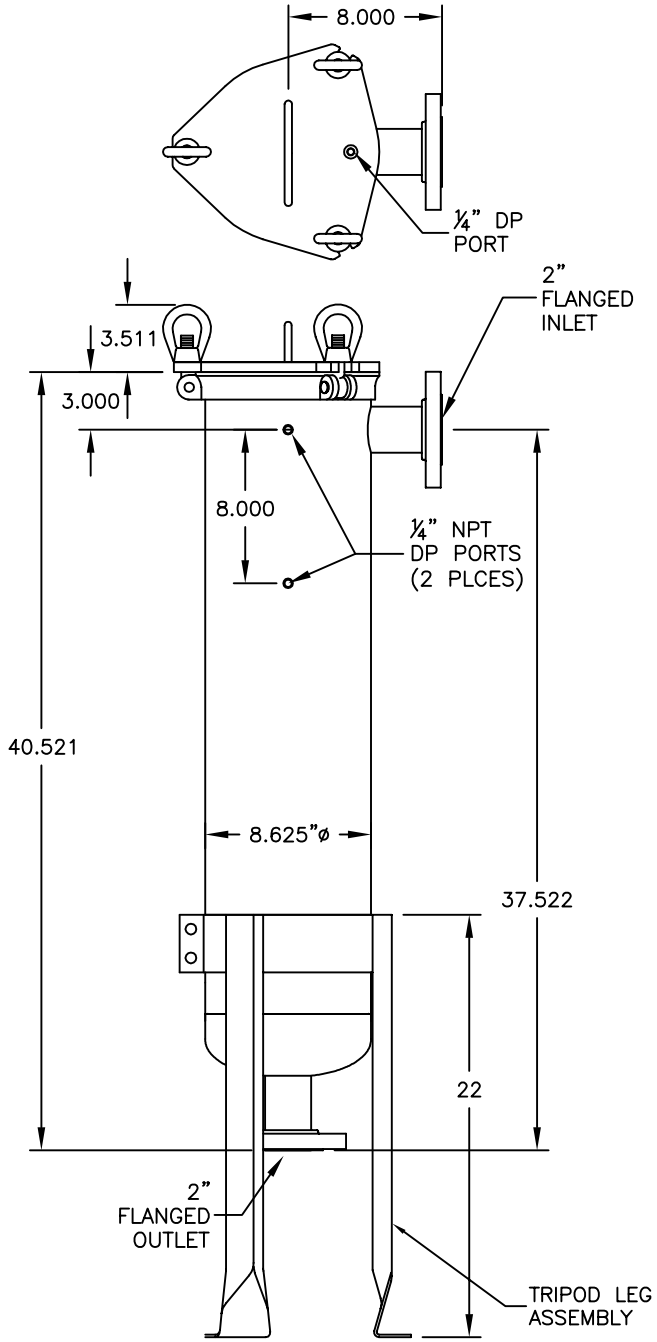

NOTES:

1. DESIGN PRESSURE - 150 PSI
2. DESIGN TEMPERATURE AT OR BELOW 150 PSI
   - STAINLESS STEEL - 250° F
   - CARBON STEEL - 500° F

OPTIONS

A. MATERIALS OF CONSTRUCTION
- CARBON STEEL
- 304 STAINLESS STEEL
- 316 STAINLESS STAINLESS

B. COVER GASKET MATERIAL
- BUNA N*
- EPR
- VITON
- TEFLON ENCAPSULATED VITON

C. ADJUSTABLE TRIPOD LEGS
- CARBON STEEL*
- 304 STAINLESS STEEL
- 316 STAINLESS STEEL

D. BASKET TYPE: (STAINLESS STEEL
- FILTER BAG - 9/64 Ø PERFORATIONS - PB*
  REFER TO **"How to Order a Filter Bag Housing"** FOR DETAILS

4. DIFFERENTIAL PRESSURE PORTS
   - ¼" NPT - 2 PLACES
5. SIZE #2 FILTER BAGS ARE ORDERED SEPARATELY

* OPTIONS THAT ARE STANDARD WITH UNIT.

For your approval, please review drawing carefully. If it is correct, promptly sign & return.

Approved By:_____ Date:_____

TITLE:	MODEL 830 FILTER BAG HOUSING 2" FLANGED – SIZE #2 – STYLE #1		
MODEL NO.:	#8–30–2F–1–150–__–__–PB–DP		
FILE NAME:	8–30–2F–1–150–__–__–PB–DP		REV.
DR.: D.M.E.	DATE: 11/20/14	SCALE: NA	SHEET: 1 OF 1